Operating instructions

LABORATORY - JAW CRUSHER

PULVERISETTE 1 *classic line*

Valid starting with: 01.50XX/2185

Valid starting with: 01.70XX/2180

Read the instructions prior to performing any task!

Translation of the original operating instructions

Fritsch GmbH
Milling and Sizing
Industriestraße 8
D - 55743 Idar-Oberstein
Telephone: +49 6784 70-0
Email: info@fritsch.de
Internet: www.fritsch.de

Certifications and CE conformity

Certification

Fritsch GmbH has been certified by the SGS-TÜV Saar GmbH.

An audit certified that Fritsch GmbH conforms to the requirements of the DIN EN ISO 9001:2015.

CE Conformity

The enclosed Conformity Declaration lists the guidelines the FRITSCH instrument conforms to, to be able to bear the CE mark and the UKCA mark!

Table of contents

1 Basic structure

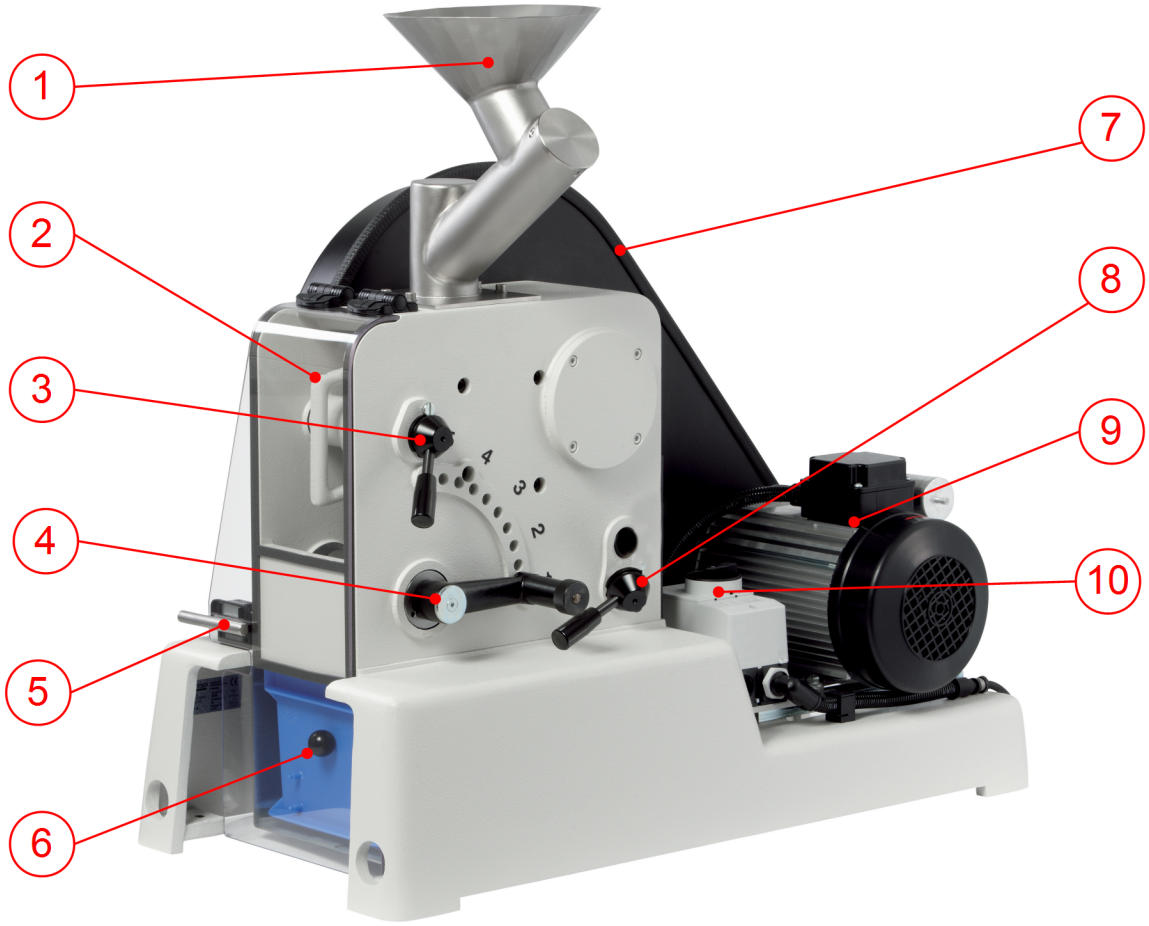

1 Funnel
2 Fixed crushing plate
3 Fixed crushing plate guide pin
4 Cam shaft grinding gap (crank)
5 Cover safety switch
6 Grinding stock container
7 Belt guard
8 Link pin
9 Motor
10 Main switch

2 Safety information and use

2.1 Requirements for the user

This operating manual is intended for persons assigned with operating and monitoring the Fritsch of the PULVERISETTE 1 classic line. The operating manual and especially its safety instructions are to be observed by all persons working on or with this device. In addition, the applicable rules and regulations for accident prevention at the installation site are to be observed. Always keep the operating manual at the installation site of the of the PULVERISETTE 1 classic line.

People with health problems or under the influence of medication, drugs, alcohol or exhaustion must not operate this device.

The of the PULVERISETTE 1 classic line may only be operated by authorised persons and serviced or repaired by trained specialists. All commissioning, maintenance and repair work may only be carried out by technically qualified personnel. Qualified personnel are persons who, because of their education, experience and training as well as their knowledge of relevant standards, regulations, accident prevention guidelines and operating conditions, are authorised by those responsible for the safety of the machine to carry out the required work and are able to recognize and avoid possible hazards as defined for skilled workers in IEC 364.

In order to prevent hazards to users, follow the instructions in this manual.

Malfunctions that impair the safety of persons, the of the PULVERISETTE 1 classic line or other material property must be rectified immediately. The following information serves both the personal safety of operating personnel as well as the safety of the products described and any devices connected to them: All maintenance and repair work may only be performed by technically qualified personnel.

This operating manual is not a complete technical description. Only the details required for operation and maintaining usability are described.

Fritsch has prepared and reviewed this operating manual with the greatest care. However, no guarantee is made for its completeness or accuracy.

Subject to technical modifications.

2.2 Scope of application

NOTICE

Fritsch laboratory mills are not intended for use in explosion-hazardous areas. Fritsch laboratory mills therefore fall outside the scope of the 94/9/EC Directive, but within the scope of the Machinery Directive 2006/42/EC. The use of Fritsch laboratory mills within explosion-hazardous areas is not permissible according to ATEX (94/9/EC) and is only allowed if additional explosion protection measures are taken. According to the Machinery Directive 2006/42/EC, there are no ignition sources in our mills that can become effective during normal operation. Nonetheless, there may be ignition sources in our mills that may become effective in the event of probable malfunctions.

Because Fritsch has only limited information on the composition of the ground product in use, its final fineness and therefore ultimately its ignition temperature, no statement regarding the explosion risk during intended use in conjunction with the occurring energy input can be made.

The occurrence of dust explosions can therefore never be completely ruled out. The user must create an explosion protection document in accordance with the ATEX 137 Directive (1999/92/EC) and define appropriate protective measures.

NOTICE

This laboratory instrument is designed for an 8-hour shift operation at 30 % duty cycle and not for continuous operation.

The duty cycle is defined as the ratio of load duration to run time. The run time is defined as load duration plus pause time. According to DIN EN 60034-1 (VDE 0530, IEC34-1) a continuous operation already takes place after a standardised run time of 10 minutes. At 30 % duty cycle (DC = ratio of load duration to run time) a load duration of 3 minutes and a pause time of 7 minutes would be within standard.

If the standardised run time of 10 minutes is exceeded, then, by definition, there would be a continuous operation and disproportionate temperature increases may occur, possibly involving increased wear.

The PULVERISETTE 1 classic line is a Laboratory - jaw crusher for pre-crushing of hard and brittle sample material from the fields of mining and metallurgy, geology and mineralogy, chemical industry, as well as the glass and ceramics industry.

The maximum feed size is

- Model I 65 mm
- Model II 100 mm

The achievable final fineness is between approx. 15 mm and 2 mm depending on the setting.

The jaw crusher described here is production equipment for use in industrial environments. The device may be used for these purposes only.

2.2.1 Operating principle

The materials are comminuted in a crushing chamber which is formed by two support walls, an adjustable, fixed crushing plate, and an oscillating, movable crushing plate. The oscillating crushing jaw is driven by a flywheel and a robust cam. Its special sequence of movements draws the material to be comminuted into the crushing chamber and prevents the crushed material from getting jammed. Crushed material exits the crushing chamber though the adjustable output gap and is collected in the grinding stock container.

2.3 Obligations of the operator

Before using the of the PULVERISETTE 1 classic line, this manual is to be carefully read and understood. The use of the of the PULVERISETTE 1 classic line requires technical knowledge; only commercial use is permitted.

The operating personnel must be familiar with the content of the operating manual. For this reason, it is very important that these persons actually receive the present operating manual. Ensure that the operating manual is always near the device.

The of the PULVERISETTE 1 classic line may exclusively be used within the scope of applications set down in this manual and within the framework of guidelines put forth in this manual. In case of non-compliance or improper use, the customer assumes full liability for the functional capability of the PULVERISETTE 1 classic line and for any damage or injury arising from failure to fulfil this obligation.

By using the of the PULVERISETTE 1 classic line the customer agrees with this and recognizes that defects, malfunctions or errors cannot be completely excluded. To prevent risk of damage to persons or property or of other direct or indirect damage, resulting from this or other causes, the customer must implement sufficient and comprehensive safety measures for working with the of the PULVERISETTE 1 classic line.

Neither compliance with this manual nor the conditions and methods used during installation, operation, use and maintenance of the of the PULVERISETTE 1 classic line can be monitored by Fritsch GmbH. Improper execution of the installation can result in property damage and thus endanger persons. Therefore, we assume absolutely no responsibility or liability for loss, damage or costs that result from errors at installation, improper operation or improper use or improper maintenance or are in any way connected to these.

The applicable accident prevention guidelines must be complied with.

Generally applicable legal and other obligatory regulations regarding environmental protection must be observed.

2.4 Information on hazards and symbols used in this manual

Safety information

Safety information in this manual is designated by symbols. Safety information is introduced by keywords that express the extent of the hazard.

DANGER

This symbol and keyword combination points out a directly hazardous situation that can result in death or serious injury if not avoided.

WARNING

This symbol and keyword combination points out a possibly hazardous situation that can result in death or serious injury if not avoided.

CAUTION

This symbol and keyword combination points out a possibly hazardous situation that can result in slight or minor injury if not avoided.

NOTICE

This symbol and keyword combination points out a possibly hazardous situation that can result in property damage if not avoided.

ENVIRONMENT

This symbol and keyword combination points out a possibly hazardous situation that can result in environmental damage if not avoided.

Special safety information

To call attention to specific hazards, the following symbols are used in the safety information:

DANGER

This symbol and keyword combination points out a directly hazardous situation due to electrical current. Ignoring information with this designation will result in serious or fatal injury.

DANGER

This symbol and keyword combination designates contents and instructions for proper use of the machine in explosive areas or with explosive substances. Ignoring information with this designation will result in serious or fatal injury.

DANGER

This symbol and keyword combination designates contents and instructions for proper use of the machine with combustible substances. Ignoring information with this designation will result in serious or fatal injury.

WARNING

This symbol and keyword combination points out a directly hazardous situation due to movable parts. Ignoring information with this designation can result in hand injuries.

WARNING

This symbol and keyword combination points out a directly hazardous situation due to hot surfaces. Ignoring information with this designation can result in serious burn injuries due to skin contact with hot surfaces.

Safety information in the procedure instructions

Safety information can refer to specific, individual procedure instructions. Such safety information is embedded in the procedure instructions so that the text can be read without interruption as the procedure is being carried out. The keywords described above are used.

Example:

1. Loosen screw.
2. 

   CAUTION

   Risk of entrapment at the lid.

   Close the lid carefully.
3. Tighten screw.

Tips and recommendations

This symbol emphasises useful tips and recommendations as wells as information for efficient operation without malfunction.

Further designations

To emphasise procedure instructions, results, lists, references and other elements, the following designations are used in this manual:

Designation	Explanation
1., 2., 3. ...	Step-by-step procedure instructions
⇨	Results of steps in the procedure
	References to sections in this manual and relevant documentation
■	Lists without a specific order
[Button]	Operating elements (e.g. push button, switch), display elements (e.g. signal lamps)
'Display'	Screen elements (e.g. buttons, function key assignment)

2.5 Device safety information

Please observe!

- Only use original accessories and original spare parts. Failure to observe this instruction can compromise the safety of the machine.
- Accident-proof conduct is to be strictly followed during all work.
- Comply with all currently applicable national and international accident prevention guidelines.

CAUTION

Wear hearing protection!

If a noise level of 85 dB(A) is reached or exceeded, ear protection should be worn to prevent hearing damage.

WARNING

The maximum accepted concentration (MAC) levels of the relevant safety guidelines must be observed; if necessary, ventilation must be provided or the machine must be operated under an extractor hood.

DANGER

Explosion hazard!

- When Grinding oxidizable substances, e.g. metals or coal, there is a risk of spontaneous combustion (dust explosion) if the share of fine particles exceeds a certain percentage. When Grinding these kinds of substances, special safety measures must be taken and the work must be supervised from a specialist.
- The PULVERISETTE 1 classic line is not explosion protected and is not designed to grind explosive materials.

- Do not remove the information signs.

NOTICE

Immediately replace damaged or illegible information signs.

- Unauthorised alteration of the of the PULVERISETTE 1 classic line will void Fritsch's declaration of conformity to European directives and void the guarantee.
- Only use the of the PULVERISETTE 1 classic line when it is in proper working order, as intended and in a safety- and hazard-conscious manner adhering to the operating manual. In particular, immediately rectify any malfunctions that could pose a safety hazard.
- If, after reading the operating manual, there are still questions or problems, please do not hesitate to contact our specialised personnel.

2.6 Protective equipment

Protective equipment is to be used as intended and may not be disabled or removed.

All protective equipment is to be regularly checked for integrity and proper functioning.

The Laboratory - jaw crusher has a comprehensive safety system:

1. The funnel is protected against being reached into by a zig-zag shaped material guide.
2. A safety switch monitors the closing of the front cover during operation and prevents the Laboratory - jaw crusher from starting up when the cover is open.
   - The switch fulfils the directives concerning personal protective equipment.
   - The Laboratory - jaw crusher will not start when the front cover is open.
   - The Laboratory - jaw crusher stops when the front cover is opened.

2.7 Hazardous points

- Crushing hazard when closing the front cover!

2.8 Electrical safety

2.8.1 General information

- The main switch disconnects the device from the mains on all poles.
- If the Laboratory - jaw crusher is not operated for a longer period of time (e.g. overnight), disconnect the device from the mains by pulling the mains plug.
- The Laboratory - jaw crusher is equipped with a motor protection switch that is adapted to the mains voltage (according to the type plate).

  The motor protection switch automatically cuts off the current supply in the event of an overload or a defective motor or cable. After the malfunction has been rectified, the device can be switched on again by means of the main switch.
- The Laboratory - jaw crusher is switched on and off using the main switch.
  - When the main switch is turned to the Start position "I" →, the Laboratory - jaw crusher starts up.
  - When the main switch is turned to the Stop position "0" →, the Laboratory - jaw crusher comes to a standstill after approx. 3 seconds.
  - The front cover can be opened.

2.8.2 Protection against restart

The Laboratory - jaw crusher comes to a standstill if there is a power outage during operation: The Jaw Crusher comes to a standstill after approx. 3 seconds.

When electrical power returns, the Laboratory - jaw crusher does not start up.

- The jaw crusher is secured against restarting.
- When the main switch is turned to the Start position "I": The Laboratory - jaw crusher starts up.

3 Technical data

3.1 Dimensions

Typ 1

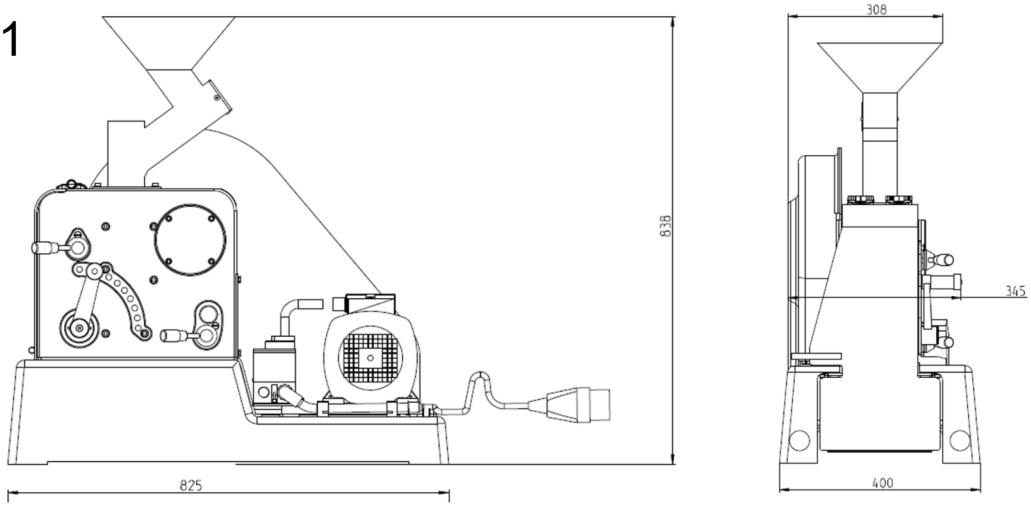

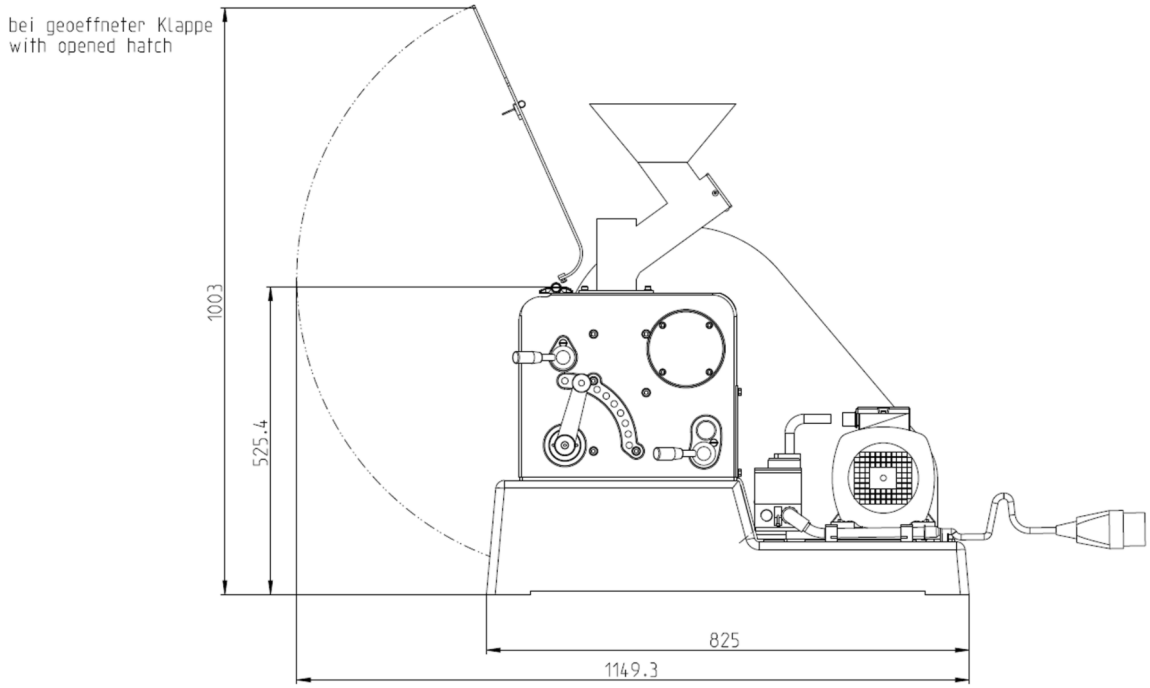

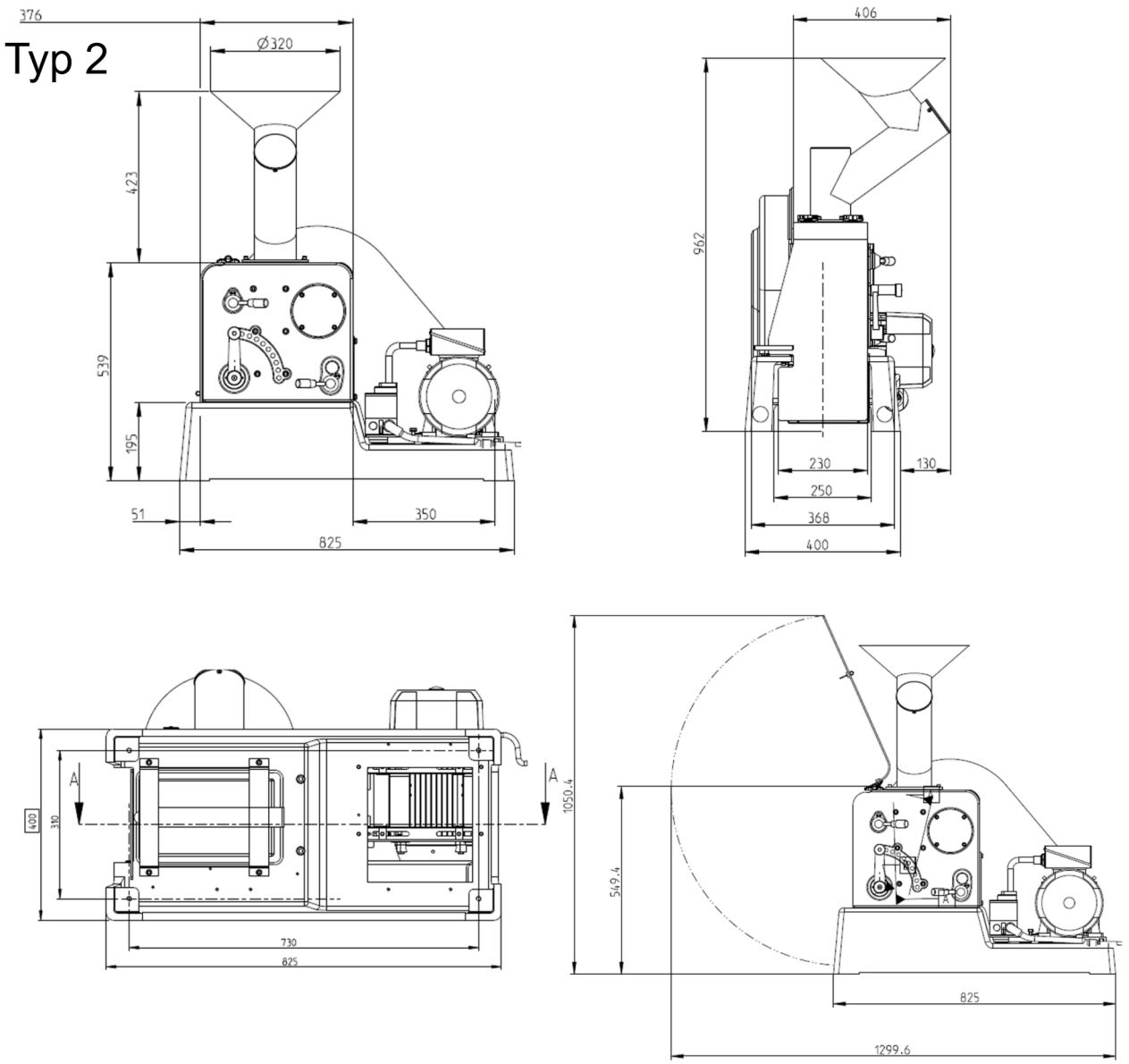

3.2 Weight

Model I:

177 kg net

202 kg gross

Model II:

205 kg net

230 kg gross

3.3 Operating noise

Emissions value of workplace according to DIN EN ISO 3746:2005 L_{Pa} = 93 dB(A).

3.4 Voltage, current consumption, power consumption

The device can be operated in the following voltage ranges:

Model I:

- Single-phase alternating current 115 V +/- 10 %, 60 Hz, 14,7 A, 1,7 kW
- Single-phase alternating current 230 V +/- 10 %, 50 Hz, 6,8 A, 1,57 kW
- Three-phase alternating current 200 V +/- 10 %, 60 Hz, 4 A, 1,34 kW
- Three-phase alternating current 400 V +/- 10 %, 50 Hz, 2 A, 1,34 kW

Model II:

- Three-phase alternating current 230 V +/- 10 %, 60 Hz, 6,5 A, 2,6 kW
- Three-phase alternating current 400 V +/- 10 %, 50 Hz, 3,7 A, 2,6 kW
- Three-phase alternating current 200 V +/- 10 %, 60 Hz, 6,5 A, 2,6 kW

Transient overvoltages in accordance with overvoltage category II are permitted. (See also ➦ *Chapter 4.6 'Electrical connection' on page 21*)

3.5 Electrical fuses

The electrical fuse is a motor protection switch, which is integrated in the main switch.

3.6 Material

Feed size:

Model I approx. 60 mm

Model II approx. 95 mm

Throughput: (depending on the set gap width and the sample material)

Model I - 140 kg / h

Model II - 200 kg / h

3.7 Final fineness

The final fineness depends on the set gap width and the sample material.

Example: Approx. 80 % of stone crushed with the smallest gap has a final fineness of < 4 mm.

3.8 Protection class

IP 54

4 Installation

4.1 Transport

The device is delivered on a transport pallet with a wooden cover. We recommend using a forklift or pallet truck for transporting the packed device.

DANGER

Do not step under the transport pallet during transport.

WARNING

Improper lifting can lead to personal injury or property damage. The machine is only to be lifted with suitable equipment and by qualified personnel.

The guarantee excludes all claims for damage due to improper transport.

4.2 Unpacking

- Pull out the nails that fasten the cover to the transport pallet. The cover is the wooden box that has been placed over the transport pallet.
- Lift the cover off of the transport pallet.

CAUTION

Crushing hazard!

Always lift with 2 persons.

- Compare the contents of the delivery with your order.

4.3 Setting up

NOTICE

Allow the device to acclimatise for two hours before commissioning. High temperature differences can lead to condensation in the device and damage to the electronics after switching on.

Strong temperature fluctuations can occur during transport or interim storage. Depending on the temperature difference between the installation site and the transport or storage environment, condensation can form inside the device. This can damage the electronics if the devices are switched on too early. Wait for at least two hours after setup before switching on the device.

DANGER

Do not step under the transport pallet during transport.

CAUTION

The weight of the jaw crusher is

Model I: 177 kg

Model II: 205 kg

NOTICE

The Laboratory - jaw crusher must be placed on a flat, stable surface. It can be screwed onto it or a base plate.

1. The jaw crusher is screwed to the pallet from below using 4 screws. Unscrew the screws with a 17 mm spanner.
2. Lash the harnesses to a crane or another hoist.
3. Next, lash the harness to the two eyelets provided for this purpose on the front and back of the device.
4. Lift the device off the transport pallet.

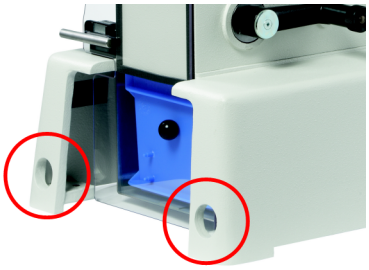

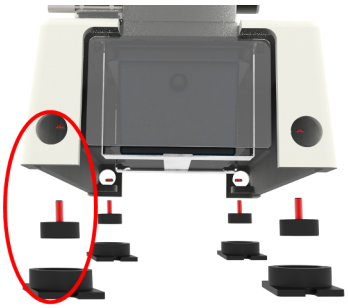

5. To avoid movements of the machine during the grinding process, mount the included feet with the corresponding rubber pads on the 4 corners of the machine that were previously attached to the transport pallet.
6. Screw the 4 feet into the correct threads from below and lock them from the top using the included lock nuts.
7. Using a crane, bring the jaw crusher to the desired position and place the anti-slip mats below the 4 feet. When positioning the device, make sure it does not swing when it is suspended from the crane.
8. Remove the harnesses.

4.4 Ambient conditions

WARNING

Mains voltage!

- The device may only be operated indoors.
- The surrounding air may not carry any electrically conductive dust.
- Maximum relative humidity 80% for temperatures up to 31°C, linearly decreasing down to 50% relative humidity at 40°C.

- The room temperature has to stay between 5 - 40°C.
- Altitudes up to 2000 m
- Degree of pollution 2 according to IEC 664.

4.5 Attaching the funnel

The Laboratory - jaw crusher is delivered with the funnel **not** attached. Before operating the device for the first time, the funnel must be attached.

1. Take the funnel and the supplied hexagon socket screw key out of the packaging.
2. Remove the 4 cylinder screws and the washers with the hexagon socket screw key.

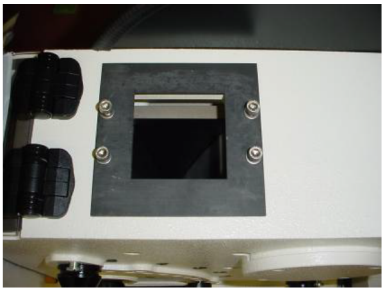

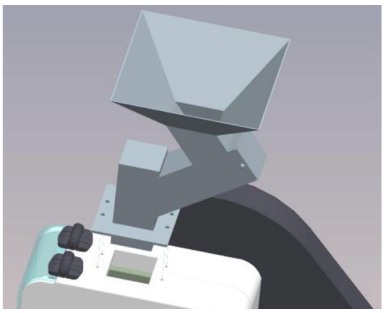

3. Insert the funnel into the funnel opening intended for this purpose on the top side of the Laboratory - Jaw Crusher.
4. Screw the funnel to the housing using the 4 previously removed cylinder head screws and the washers.

5. The cylinder head screws must be firmly tightened so that the rubber seal is compressed and sealed.

4.6 Electrical connection

DANGER

Provide short-circuit protection!

Risk of damage due to short-circuits.

– Make sure that the socket is connected to a mains line protected with a residual current circuit breaker.

Before establishing the connection, compare the voltage and current values stated on the type plate with the values of the mains system to be used. (See ➦ *Chapter 3 'Technical data' on page 15*)

4.6.1 Adapting to the mains

CAUTION

Mains voltage!

Changes to the connection voltage, from 230 V 3~ to 400 V 3~, and / or the connection line may only be made by an electrician.

4.6.2 Drive motor

Driven by:

1~ 120 V motor,

1~ 230 V motor,

3~115 / 200 V motor or

3~230 / 400 V motor.

The drive motors are single-phase motors. Because of the drive's high reduction ratio, the jaw crusher comes to a standstill very quickly when switched off.

4.6.3 Rotation direction of the drive motor

(See the arrow on the motor housing)

DANGER

Mains voltage!

Changes to the rotation direction may only be made by a qualified technician.

The direction of rotation of the three-phase AC motor must anticlockwise as seen through the ventilation grid from the frontal perspective.

The single-phase motor is set at the factory to an anticlockwise direction of rotation; see:

DIN VDE 0530 Part 8 "Terminal Markings and Direction of Rotation"

DIN VDE 0530 Part 7 / EN 60 934-7 "Abbreviations for Models"

The direction of rotation is changed by swapping two supply lines "L1, L2, L3" (or the power supply line "U1, U2, U3" in the socket).

5 Initial start-up

CAUTION

Crushing hazard!

Only operate the Laboratory - jaw crusher with the funnel attached!

Switch on the device only after all work as described in ➦ *Chapter 4 'Installation' on page 18* has been carried out.

During the first hours of operation, a small quantity of grease may escape from the cam bearing of the movable crushing jaw (see ➦ *Chapter 9.4 'Lubricating the bearings' on page 45*). After a few hours of operation, the grease will be evenly distributed throughout the roller bearing compartment and grease will no longer escape.

NOTICE

Only operate the Laboratory - jaw crusher with the crushing plates installed and fastened!

5.1 Switching on

Set the main switch to ON (I). The jaw crusher starts up.

5.2 Switching off

Set the main switch to OFF (0). The Laboratory - jaw crusher stops within a few seconds.

6 Using the device

WARNING

If the grinding elements used are not original accessories, we provide no guarantee and exclude all liability for damage to the device.

CAUTION

A maximum of 20 starts per hour are permitted for a Laboratory - jaw crusher with a 230 V and 110 V single-phase motor.

6.1 Comminution of material to be crushed

6.1.1 Setting the gap width

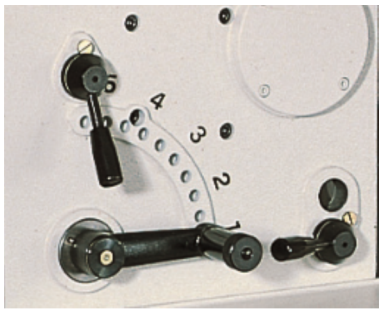

The gap width between the crushing plates determines the mean particle feed size of the crushed material. The crank can be used to set the gap in increments of approx. 1 to 15 mm. (at the lowest position, the gap is smallest - see image)

To change the gap width, pull out the knurled knob of the crank and set the crank to the desired position. Let the knob snap into place properly; this fastens the crushing plate.

Materials which are difficult to crush (e.g. alloys) should be pre-crushed using a larger gap width in a first pass.

Then, for the second pass, set the appropriate gap width for the desired fineness.

If no practical data is available on the crushing properties of the sample material, it is recommended to carefully crush part of the sample material in a first pass.

6.1.2 Adding material

CAUTION

Switch the device on before filling material into the funnel.

Larger pieces of material should be put into the funnel one piece at a time:

- Model I maximum edge length 60 mm,
- Model II maximum edge length 95 mm,

Only add the rest of the material once the crushing noise becomes noticeably quieter.

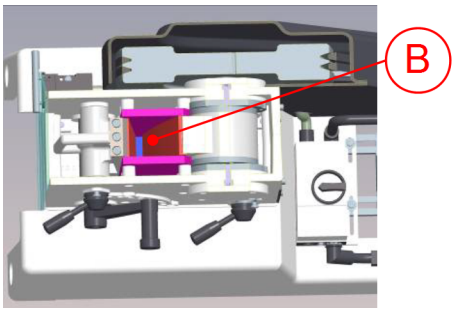

B Crushing chamber

Never fill more material to be crushed into the funnel than the actual crushing chamber (B) can hold. The upper edges of the support walls and crushing plates form the border of the crushing chamber at the top.

There should not be any material above these edges. During continuous operation, only the same quantity may be added that is discharged as crushed material.

The maximum quantity to be fed depends on the crushing properties of the material and the selected gap width. Observe the crushing process (crushing noise) for each new material and determine the optimum quantity to be fed.

6.1.3 Dust extraction

Dust may form during comminution with small gap widths and accumulate in the crushing chamber (B). To stop it from spreading, the PULVERISETTE 1 classic line can be equipped with a vacuum cleaner. See ➡ *Chapter 7.1 'Conversion for use with the dust exhaust system' on page 33*.

6.1.4 Final fineness

The achievable final fineness depends on the material properties and the gap setting between the two crushing plates. This gap width, however, only determines one dimension of the crushed material. That means, for materials which form platelets when crushed, the proportion of the pieces with a larger length or area can be significantly decreased by performing a second pass.

When the smallest gap width is set, the mean particle feed size (d_{50}) of the crushed material is approx. 2 mm.

Example: Approx. 80 % of stone crushed with the smallest gap has a final fineness of < 4 mm.

6.1.5 Setting the pressure plate

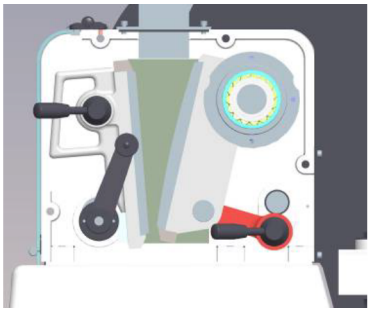

The bottom position of the link pin is used for standard applications with the largest possible throughput.

If the samples are easily crushed, it can be advantageous in certain cases (e.g. for a greater final fineness) to set the pressure plate to the upper position.

> *If, however, the material to be crushed is sticky, e.g. coal, this setting is less suitable.*

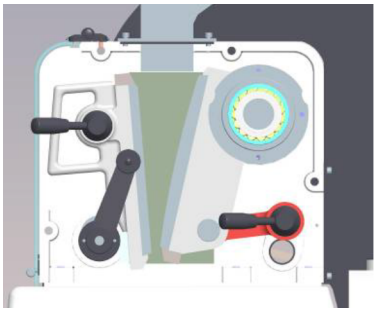

In the upper position, the opening angle of the movable crushing plate is decreased so that the particle size distribution of the material to be crushed is more narrow and the size of the particles is more uniform. This setting, however, leads to a slightly longer crushing time.

It can be advantageous in certain cases to pre-crush the material with the pressure plate set to the lower position and then set the pressure plate to the upper position before performing a second pass.

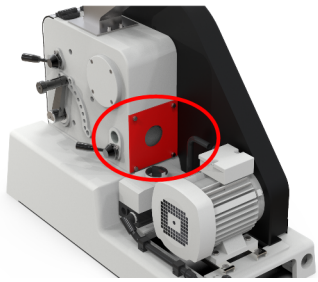

1. Disassemble the cover of the exhaust on the back side.

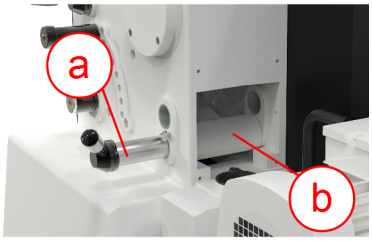

a Bolt
b Pressure plate

2. You can see the pressure plate (b) with the bolt (a). Hold the pressure plate (b) firm with the right hand, turn the bolt (a) and pull it out.

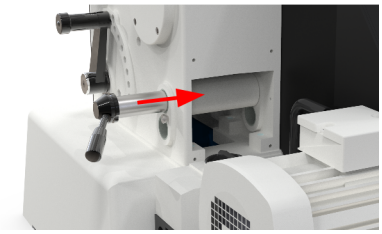

3. Raise of lower the pressure plate into one of the two possible positions and push the bolt through the pressure plate.

> **NOTICE**
>
> Make sure that the bolt is pushed through the pressure plate and that it is **not** above or below the pressure plate. This can cause damage to the device.

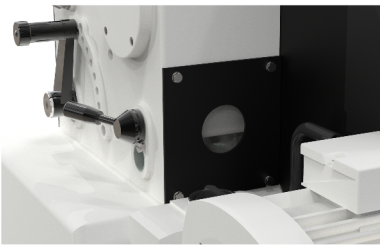

4. Turn the bolt so that it cannot slide out due to vibrations.
5. Mount the cover back on the exhaust.

6.2 Selecting the crushing plates and lateral support walls

The standard model of the Laboratory - jaw crusher is equipped with crushing plates and support walls made of hardened tool steel.

In custom-built or retrofitted models, crushing jaws and support walls are available which are made of the following materials:

Model I		
Material	**Designation**	**Order number**
Hardened tool steel	Fixed crushing plate	43.0010.09
	Movable crushing plate	43.0020.09
	1 pair of support walls	43.0070.09
Chromium-free steel	Fixed crushing plate	43.0011.09
	Movable crushing plate	43.0021.09
	1 pair of support walls	43.0071.09
Chromium-nickel stainless steel	Fixed crushing plate	43.0030.10
	Movable crushing plate	43.0040.10
	1 pair of support walls	43.0080.10
Tungsten carbide (WC + Co)	Fixed crushing plate	43.0050.08
	Movable crushing plate	43.0060.08
	1 pair of support walls	43.0090.08
Zirconium oxide	Fixed crushing plate	43.0100.27
	Movable crushing plate	43.0110.27
	1 pair of support walls	43.0160.27
Manganese steel	Fixed crushing plate	43.0130.23
	Movable crushing plate	43.0140.23

Model I		
Material	**Designation**	**Order number**
Aluminium	1 pair of support walls	43.0150.13

Model II		
Material	**Designation**	**Order number**
Hardened tool steel	Fixed crushing plate	43.3010.09
	Movable crushing plate	43.3020.09
	1 pair of support walls	43.3070.09
Chromium-free steel	Fixed crushing plate	43.3011.09
	Movable crushing plate	43.3021.09
	1 pair of support walls	43.3071.09
Chromium-nickel stainless steel	Fixed crushing plate	43.3030.10
	Movable crushing plate	43.3040.10
	1 pair of support walls	43.3080.10
Tungsten carbide (WC + Co)	Fixed crushing plate	43.3050.08
	Movable crushing plate	43.3060.08
	1 pair of support walls	43.3090.08
Zirconium oxide	Fixed crushing plate	43.3100.27
	Movable crushing plate	43.3110.27
	1 pair of support walls	43.3160.27
Manganese steel	Fixed crushing plate	43.3130.23
	Movable crushing plate	43.3140.23
Aluminium	1 pair of support walls	43.3150.13

The crushing plates made of zirconium oxide are only suitable for crushing medium-hard and brittle materials (or similar). Metal may not be crushed under any circumstances.

The Cr-Ni steel equipment is recommended for crushing damp material; this would cause the plates and walls made of tool steel to rust.

The tungsten carbide equipment is recommended for crushing very hard material or to avoid ferrous contaminants.

6.3 Replacing the crushing plates and the support walls

DANGER

Mains voltage!

- Before beginning with maintenance and assembly work, disconnect the mains plug and protect the device against being unintentionally switched back on!
- Indicate maintenance and assembly work with warning signs.

When the of the PULVERISETTE 1 classic line is delivered, one set of crushing plates and the support walls are firmly attached. The PULVERISETTE 1 classic line is ready to use after connecting the electricity.

The crushing jaws (and the support walls to an extremely small extent) are subject to wear and must also be turned over and then replaced at a later time.

NOTICE

Make sure the crushing plates on the right and left sides protrude somewhat beyond the crushing jaws.

If it is noticed during an inspection or while cleaning that only the lower parts of the crushing jaws are worn, the symmetrical jaws can be simply turned over.

The fixed and movable crushing jaws have different forms.

The surfaces of the fixed crushing plate are exactly parallel; the moveable crushing jaw is convex on the crushing side, and it is somewhat longer.

6.3.1 Assembling the crushing plates

The fixed and movable crushing plates have different forms.

NOTICE

Hold the crushing jaw firmly! The part weighs approx. 6.5 kg.

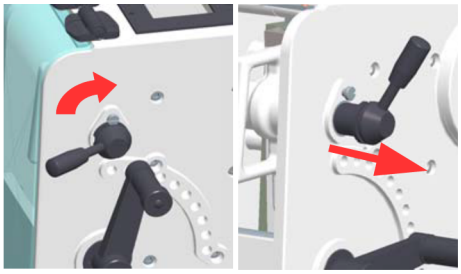

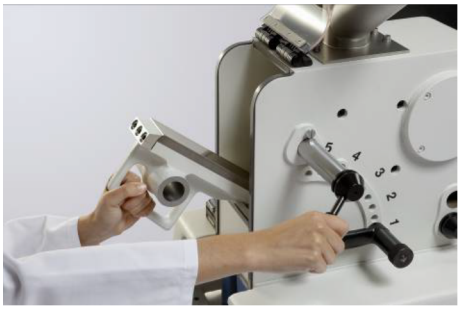

1. Open the front cover.
2. Hold the fixed crushing jaw firmly by the handle intended for this purpose and pull out the guide pin.
3. Lift the crushing jaw out of the device.

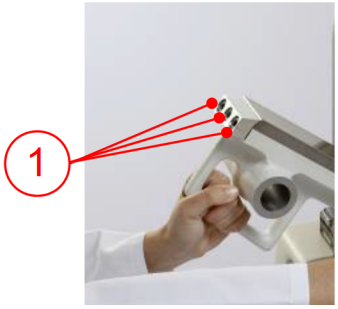

1 Unscrew

After unscrewing the clamping strip, the crushing plate can be taken out, and the replacement plate - or the previously used plate which was horizontally turned over - can be inserted and screwed on again using the clamping strip.

> **NOTICE**
>
> Make sure the crushing plates on the right and left sides protrude somewhat beyond the crushing jaws.

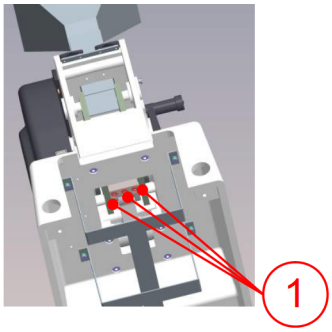

1 Unscrew

To replace the movable crushing plate, pull the grinding stock container out of its holder and remove the fixed crushing jaw. The screws of the clamping strip are easily accessible from below. **Loosen** the clamping strip and lift out the crushing plate. Insert the replacement jaw or the previously used jaw which was turned over horizontally from below and attach it by screwing on the clamping strip again.

6.3.2 Checking the gap width

After installing the crushing plates, it is necessary to check the gap width between the plates:

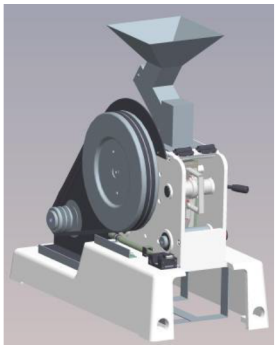

1. Remove the exterior belt guard.

   To do so, pull off the edge around the belt guard and remove the fastening screws.

   ➡ The flywheel can be turned by hand.

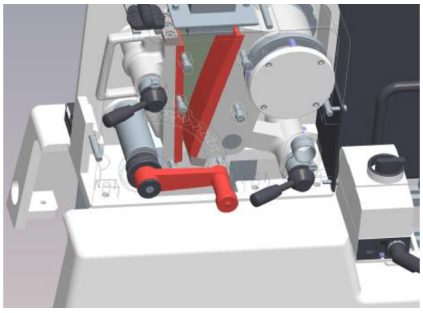

2. Set the crank to the lowest position.

   To do so, pull out the knurled knob of the crank and set the crank to position "1". Then, let the knob snap into place properly; this fastens the crushing plate.

3. Using the flywheel, manually set the movable crushing jaw to the lowermost position. This corresponds to the smallest gap.

   CAUTION

   Crushing hazard!

   Do not get fingers caught between the crushing plates!

   The gap width between the two crushing plates can be checked from below using a feeler gauge.

   The gap width should be between 0.5 mm and 1 mm.

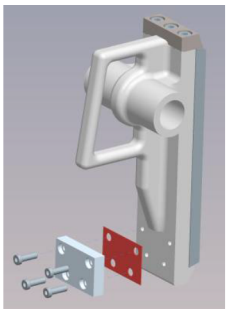

4. The gap width can be readjusted by removing or inserting compensation plates (marked red in the image) under the pressure plate on the fixed crushing jaw.

   NOTICE

   During operation of the jaw crusher, the crushing plates must not touch when the smallest gap width is set.

6.3.3 Attaching the support walls

CAUTION

Crushing hazard!

Two persons are required to remove the flywheel due to the heavy weight.

Replacing the support walls is only necessary when the crushing jaws have been replaced because their material has to be changed and because abrasion of the support walls, however slight, must be avoided.

1. First, lift out the fixed crushing jaw as described in ➦ *Chapter 6.3.1 'Assembling the crushing plates' on page 29*.
2. Unscrew and remove the exterior belt guard (see ➦ *Further information on page 30*).
3. Take off the used V-belt by slowly rolling it over the belt disc.

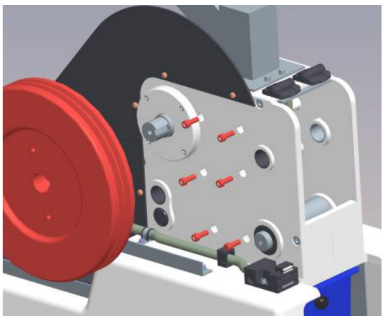

4. Pull the flywheel off its axis with 2 persons.

CAUTION

Crushing hazard!

When removing the support walls, be careful not to drop them. Before removing the last fastening screw, the support wall has to be firmly held on the inside.

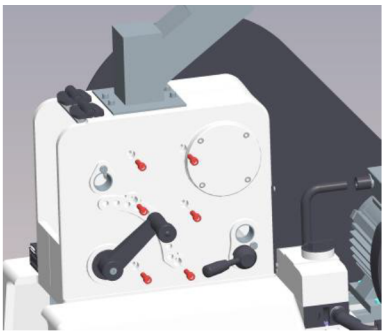

5. Remove the 6 visible fastening screws of the left support wall and lift it out from the interior.
6. The 6 fastening screws of the right support wall are directly accessible from the exterior. Unscrew the screws and lift out the support wall from the interior.
7. To install the support walls, follow the same steps in reverse order. During installation, make sure the support walls are positioned correctly because the pairs are not identical. The fastening screws have to be firmly screwed on.

   After the flywheel has been screwed on, put the V-belt back on.

   The belt guard has to be attached again.

CAUTION

Risk of injury!

The belt guard has to be attached to the device before starting up each time.

7 Accessories

7.1 Conversion for use with the dust exhaust system

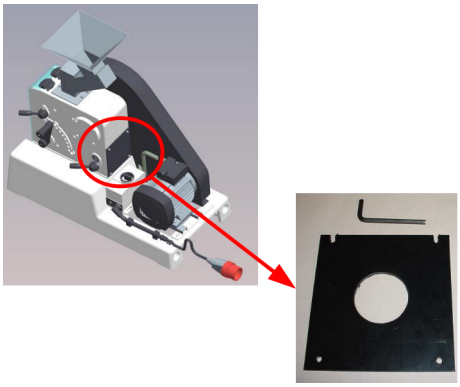

- 43.9050.00 Dust exhaust system
- 43.9051.00 Polyester filter set (pack of 2)
- 43.9052.00 Plastic bag (pack of 5)

The Laboratory - Jaw Crusher is delivered without the dust exhaust system. In order to use the dust exhaust system, the back cover has to be replaced by a special cover for dust exhaust.

It is located in the grinding stock container of the device together with the required hexagon socket screw key when the device is delivered.

DANGER

Mains voltage!

The device has to be disconnected from the mains before beginning assembly work (by pulling the mains plug out of the socket).

Assembly work may be only be carried out by a trained electrician.

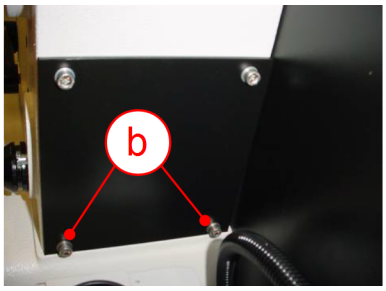

1. Unscrew the lower hexagon screws (b) by turning them once. Remove the two upper screws completely.

2. Pull the cover upward to remove it.

3. Push the cover for the dust extraction downward onto the screws with the elongated holes. Screw in the two upper screws and tighten the bottom screws.

4. The following accessories are included with the vacuum cleaner:

- Exhaust hose (c)
- Size reduction adapter (d)
- 2 rubber sleeves in different sizes (e,f)
  The rubber sleeve (f) with the larger diameter is required.
- Adapter with air volume control (g)

5. The rubber sleeve (f) is pushed into the bore hole of the cover for the dust exhaust system. One end of the exhaust hose (c) is fastened to the collecting vessel of the vacuum cleaner; the size reduction adapter (d) is attached on the other end.

6. Then, the size reduction adapter (d) is inserted into the rubber sleeve (f) of the cover for the dust exhaust system; this is done with or without the adapter for air volume control (g).

7.2 Conversion kit for metal-free pre-crushing

7.2.1 Model I

NOTICE

ZrO_2 - grinding parts are only suitable for brittle and medium-hard materials. Tough or hard materials can damage the zirconium oxide grinding elements.

- 01.5410.00 Funnel, PVC incl. clamping strip
- 43.0100.27 Fixed crushing plates made of zirconium oxide
- 43.0110.27 Movable crushing plates made of zirconium oxide
- 43.0160.27 1 pair of support walls made of zirconium oxide
- 43.0150.13 1 pair of support walls made of aluminium

7.2.2 Model II

- 01.7410.00 Funnel, PVC incl. clamping strip
- 43.3100.27 Fixed crushing plates made of zirconium oxide
- 43.3110.27 Movable crushing plates made of zirconium oxide
- 43.3160.27 1 pair of support walls made of zirconium oxide
- 43.3150.13 1 pair of support walls made of aluminium

7.2.3 Converting the funnel

DANGER

Mains voltage!

The device has to be disconnected from the mains before beginning assembly work (by pulling the mains plug out of the socket).

Assembly work may be only be carried out by a trained electrician.

7.2.3.1 Conversion kit

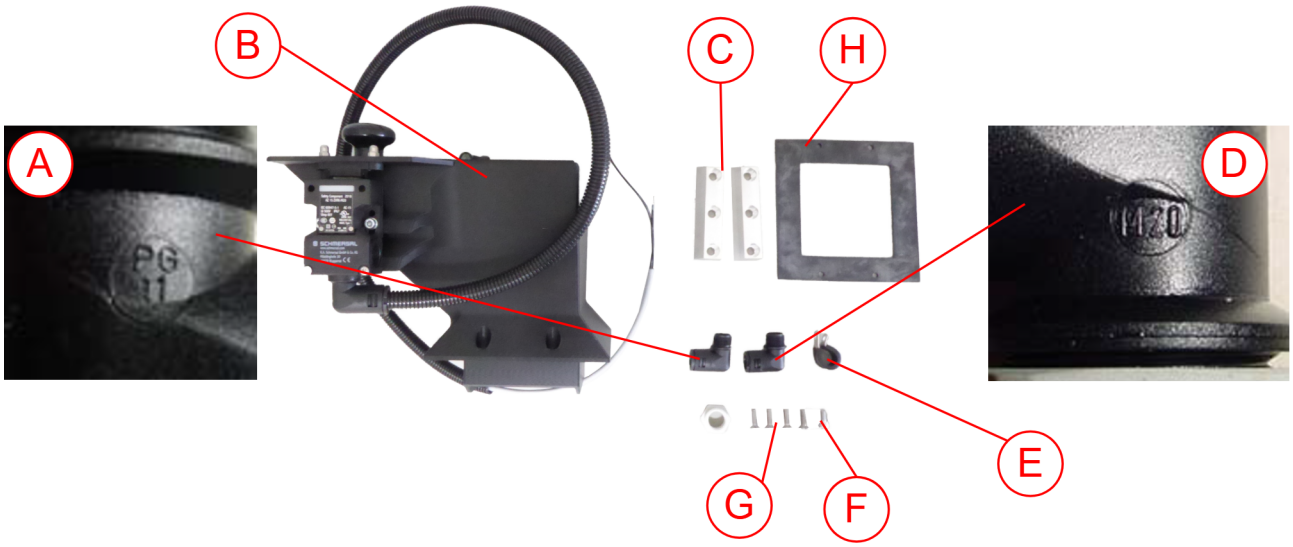

Funnel (B) with safety switch	
4x countersunk screws M6x20 (G)	Fastening the funnel
1x cylinder head screw M6x12 (F) 1x cable clamp (E)	Fastening the cable conduit
1x elbow connectors with thread PG11 (A) 1x elbow connectors with thread M20 (D)	(The standard for cable screws was changed during the device manufacturing period.)
2x clamping strips (C) made of anodised aluminium	Attaching the crushing plates
1x funnel seal (H)	

7.2.3.2 Grinding elements

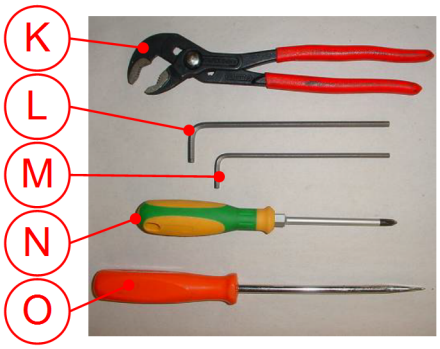

K Water pump pliers
L Hexagon socket screw key, size 5
M Hexagon socket screw key, size 4
N Cross-head screwdriver
O Slotted screwdriver

7.2.3.3 Assembly

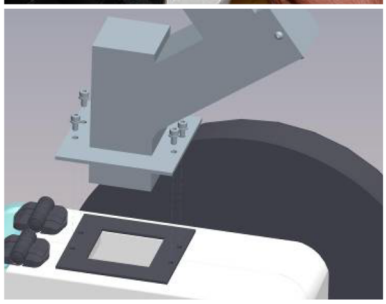

1. Unscrew and remove the funnel by unscrewing the 4 cylinder head screws of the funnel using the supplied hexagon socket screw key. Store the screws and the washers together with the funnel if the funnel will be used again.

   The rubber seal remains on the housing.

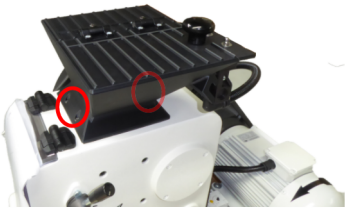

2. Attach the funnel (B) at the position displayed using the 4 countersunk M6x20 (G).

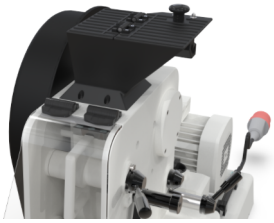

3. Select the suitable elbow connector (A or D) with the appropriate thread (PG11 or M20). To do so, check which thread fits on the left connection of the main switch.


4. Then, press out the connecting element of the elbow connector (A or D) as shown in the image.


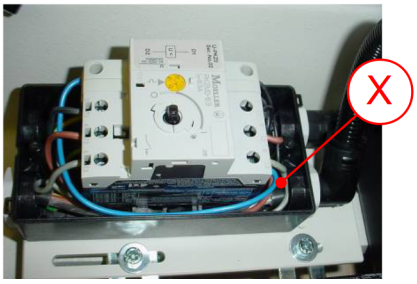

5. Unscrew the housing of the main switch using the cross-head screwdriver (N) and open it. The blue cable bridge (X) leading from the top left (connection D2) to the bottom right is visible.

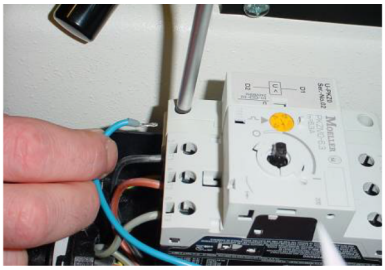
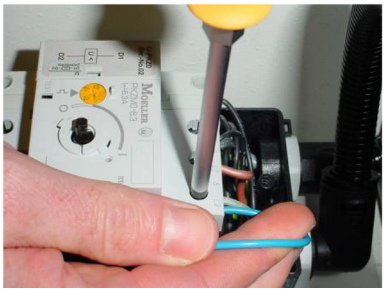

6. Unscrew the cable bridge (X) using a cross-head screwdriver and remove it.

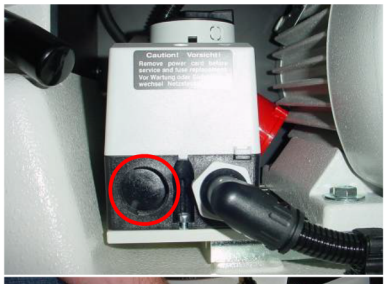

7. Push a pointed object through the threaded bore hole for the elbow connector on the housing of the main switch so that the cable of the funnel (B) can be guided through the housing.

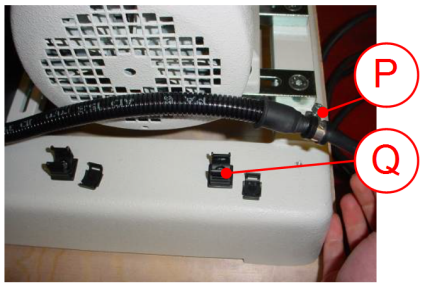

8. Open the clips (Q) of the mains connection cable and screw on the cable clamps (P).

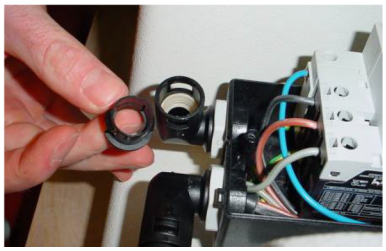

9. Unscrew screw connection of the mains connection cable and position it vertically. Screw in the elbow connector (A or D). Since there is very limited space for a screwdriver, the mains cable must be moved if necessary. Turn the elbow connector (A or D) until it is positioned vertically. Afterwards, press the removed connecting element back onto the screw connection.

10. Then, the cable of the funnel safety switch (B) is inserted into elbow connector (A or D) and the housing.

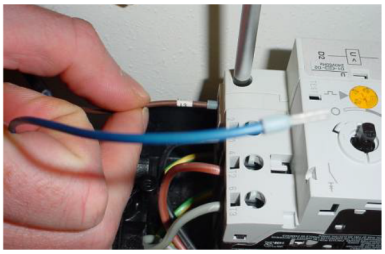

11. One cable of the safety switch is connected at the top left, and the other is connected at the bottom right (where the blue cable bridge (X) was previously attached).

12. Push the cable conduit of the funnel into the elbow connector.

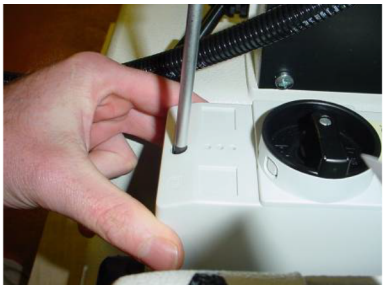

13. Afterwards, close the main switch.

14. Attach the cable conduit of the funnel (B) to the back cover of the jaw crusher. To do so, remove the screw at the top right using a cross-head screwdriver (N).

15. Push the cable clamp (E) onto the funnel cable.

16. Then, screw on the cable clamp (E) at this position (top right) using the cylinder head screw M6x12 (F).

7.3 Crushing and grinding in combination with the Disk Mill PULVERISETTE 13 classic line

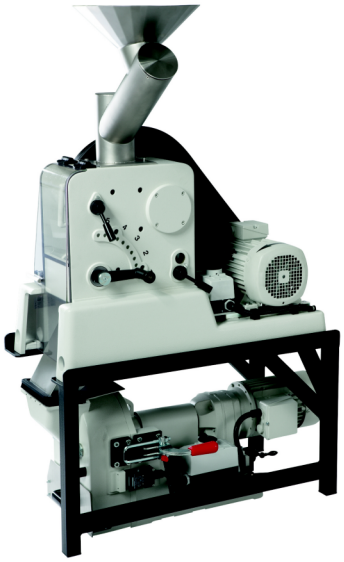

For finer comminution of coarse material before its subsequent use, which would not be possible with the jaw crusher alone, the Laboratory - jaw crusher is used in combination with the Disk Mill PULVERISETTE 13 *classic line*.

The comminution is done in this combination **in a single pass** with 95 mm (or 65 mm) feed size up to an average particle feed size (d_{50}) of 0.1 mm.

The PULVERISETTE 1 classic line is placed on a mounting rack (order no. 43.5100.00) above the disk mill. The material pre-crushed in the PULVERISETTE 1 classic line passes directly into the funnel of the disk mill via a special chute.

8 Cleaning

DANGER

Mains voltage!

- Before beginning with cleaning work, disconnect the mains plug and protect the device against being unintentionally switched back on!
- Do not allow any liquids to flow into the device.
- Indicate cleaning work with warning signs.
- Put safety equipment back into operation after cleaning work.

8.1 Grinding chamber

NOTICE

Hold the crushing jaw firmly! The part weighs approx. 6.5 kg.

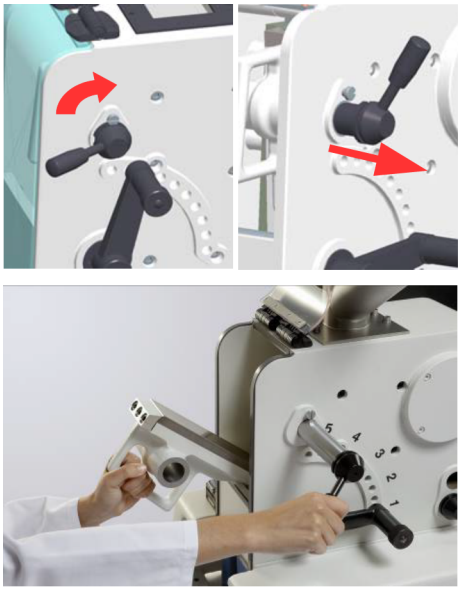

To access the crushing chamber, it is first necessary to completely disassemble the fixed crushing jaw.

To do so, open the front cover. Position the guide pin horizontally to unlatch it.

Pull out the guide pin and remove the crushing jaw. (See ➞ *Chapter 6.3.1 'Assembling the crushing plates' on page 29*).

Clean the crushing chamber with a vacuum cleaner and brush or blow it out with compressed air, if necessary. (Attention: projected grinding stock)

Harder residues of sample material on the crushing plates can be removed with a wire brush. Afterwards, wipe out the crushing chamber with alcohol (corrosion protection).

8.2 Intake connector

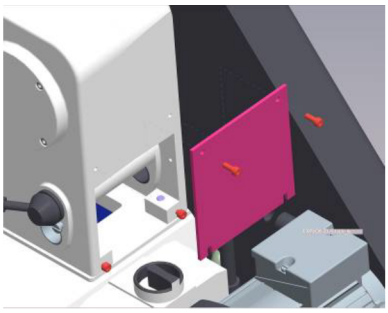

On the back of the crushing chamber, the two lower screws on the cover have to be loosened, and the upper screws have to be removed completely. Lift the cover of the lower screws by tilting it and vacuum out the space behind it.

9 Maintenance

DANGER

Mains voltage

- Before beginning with maintenance work, unplug the mains plug and protect the device against being unintentionally switched back on again!
- Indicate maintenance work with warning signs.
- Maintenance work may only be performed by specialised personnel.
- Put safety equipment back into operation after maintenance or repair work

We recommend keeping a safety logbook ➡ Chapter 13 'Safety logbook' on page 51, where all work (maintenance, repairs.....) performed on the device is entered.

The most important element of maintenance is regular cleaning!

9.1 Crushing plates

The crushing plates wear out after a certain time, depending on the material crushed. Check the surfaces at regular intervals. For information on turning the jaws over or replacing the jaws, observe the information in ➡ *Chapter 6.3.1 'Assembling the crushing plates' on page 29*.

9.2 V-belt

To retension the V-belt, unscrew the fastening screws (4x) of the motor on the rail; push the motor backward and then retighten the screws.

To replace the V-belt, the belt guard must be removed (9). Release the motor and replace the V-belt (order no. 82.0290.00). Then push the motor backward and retighten the 4 screws again as described above.

CAUTION

Risk of injury!

The belt guard has to be attached to the device before starting up each time.

9.3 Guide pin

The guide pin and the link pin should be removed and rubbed down with a dry cloth, depending on how frequently the machine is used. If particles have gotten pressed into the surface, the surfaces must be rubbed down with steel wool.

9.4 Lubricating the bearings

Their are two grease nipples on the moveable crushing jaw which are used for lubricating the bearings of the main shaft. To access them, the back cover of the crushing chamber has to be removed.

These bearings have to be lubricated with roller bearing grease after approx. 500 hours (e.g in acc. with DIN 51806) All other fitted bearings have permanent lubrication.

10 Disposal

It is hereby confirmed that FRITSCH has implemented the directive 2002/95/EC of the European Parliament and Council from 27th January 2003 for the limitation of the use of certain dangerous substances in electrical and electronic devices.

FRITSCH has registered the following categories according to the German electrical and electronic equipment act, section 6, paragraph 1, clause 1 and section 17, paragraphs 1 and 2:

Mills and devices for the preparation of samples have been registered under category 6 for electrical and electronic tools (except for large stationary industrial tools).

Analytical devices have been registered under category 9, monitoring and control instruments.

It has been accepted that FRITSCH is operating only in the business-to-business area. The German registration number for FRITSCH is WEEE reg. no. DE 60198769

FRITSCH WEEE coverage

Since the registration of FRITSCH is classified for bilateral transactions, no legal recycling or disposal process is described. FRITSCH is not obliged to take back used FRITSCH devices.

FRITSCH declares it is prepared to take back used FRITSCH devices for recycling or disposal free of charge whenever a new device is purchased. The used FRITSCH device must be delivered free of charge to a FRITSCH establishment.

In all other cases FRITSCH takes back used FRITSCH devices for recycling or disposal only against payment.

11 Guarantee terms

Guarantee period

As manufacturer, FRITSCH GmbH provides – above and beyond any guarantee claims against the seller – a guaranty valid for the duration of two years from the date of issue of the guarantee certificate supplied with the device.

Within this guarantee period, we shall remedy all deficiencies due to material or manufacturing defects free of charge. Rectification may take the form of either repair or replacement of the device, at our sole discretion. The guarantee may be redeemed in all countries in which this FRITSCH device is sold with our authorisation.

Conditions for claims against the guarantee

This guarantee is subject to the condition that the device is operated according to the instructions for use / operating manual and its intended use.

Claims against the guarantee must include presentation of the original receipt, stating the date of purchase and name of the dealer, together with the complete device type and serial number.

For this guarantee to take effect, the answer card entitled "Securing of Guarantee" (enclosed with the device) must be properly filled out and despatched without delay after receipt of the device and be received by us within three weeks or alternatively, ➞ *online registration* must be carried out with the above-mentioned information.

Reasons for loss of the guarantee

The guarantee will not be granted in cases where:

- Damage has arisen due to normal wear and tear, especially for wear parts, such as: Crushing jaws, support walls, grinding bowls, grinding balls, sieve plates, brush strips, grinding sets, grinding disks, rotors, sieve rings, pin inserts, conversion kits, sieve inserts, bottom sieves, grinding inserts, cutting tools, sieve cassettes, sieve and measuring cell glasses.
- Repairs, adaptations or modifications were made to the device by unauthorized persons or companies.
- The device was not used in a laboratory environment and/or has been used in continuous operation.
- Damage is present due to external factors (lightning, water, fire or similar) or improper handling.
- Damage is present that only insubstantially affects the value or proper functioning of the device.
- The device type or serial number on the device has been changed, deleted, removed or in any other way rendered illegible
- The above-mentioned documents have been changed in any way or rendered illegible.

Costs not covered by the guarantee

This guarantee excludes any costs for transport, packaging or travel that accrue in the event the product must be sent to us or in the event that one of our specialist technicians is required to come to your site. Any servicing done by persons not authorised by us and any use of parts that are not original FRITSCH accessories and spare parts will void the guarantee.

Further information about the guarantee

The guarantee period will neither extend nor will a new period of guarantee begin in the event that a claim is placed against the guarantee.

Please provide a detailed description of the type of error or the complaint. If no error description is enclosed, we shall interpret the shipment as an assignment to remedy all recognisable errors or faults, including those not covered by the guarantee. Errors or faults not covered by the guarantee shall in this case be rectified at cost.

We recommend reading the operating manual before contacting us or your dealer, in order to avoid unnecessary inconvenience.

Ownership of defective parts is transferred to us with the delivery of the replacement part; the defective part shall be returned to us at buyer's expense.

NOTICE

Please note that in the event that the device must be returned, the device must be shipped in the original Fritsch packaging. Fritsch GmbH denies all liability for any damage due to improper packaging (packaging not from Fritsch).

Any enquiries must include a reference to the serial number imprinted on the type plate.

12 Exclusion of liability

Before using the product, be sure to have read and understood this operating manual.

The use of the product requires technical knowledge; only commercial use is permitted.

The product may be used exclusively within the scope of applications set down in this operating manual and within the framework of guidelines put forth in this operating manual and must be subject to regular maintenance. In case of non-compliance, improper use or improper maintenance, the customer assumes full liability for the functional capability of the product and for damage or injury arising from violating these obligations.

The contents of this operating manual are subject in entirety to copyright law. This operating manual and its contents may not be copied, further distributed or stored in any form, in part or in whole, without the prior written consent of Fritsch.

This operating manual has been prepared to the best of our knowledge and checked for accuracy at the time of printing. FRITSCH GMBH assumes no guarantee or liability whatsoever for the accuracy or completeness of the contents of this operating manual, including but not limited to the implied warranties of merchantability and fitness for a particular purpose, unless liability is expressly prescribed by applicable laws or jurisprudence.

FRITSCH GMBH expressly reserves the right to modify and/or update this operating manual without prior notice. The same applies to modifications and improvements to the products described in this operating manual. It is the responsibility of the user to ensure that they have the current version of this operating manual. For more information, please contact your local FRITSCH GMBH distributor or Fritsch GmbH, Industriestr. 8, D-55473 Idar-Oberstein.

Not all parts shown here are necessarily installed in the product. The buyer is not entitled to delivery of these parts. If interested, please contact your local FRITSCH GMBH distributor or Fritsch GmbH, Industriestr. 8, D-55743 Idar-Oberstein.

FRITSCH GMBH takes the greatest care to ensure that the quality, reliability and safety of your products are continuously improved and adapted to the state of the art. The supplied products as well as this operating manual conform to the current state of the art when they leave the sphere of influence of FRITSCH GMBH.

By using the product the customer agrees with this and recognizes that defects, malfunctions or errors cannot be completely excluded. To prevent risk of damage to persons or property or of other direct or indirect damage, resulting from this or other causes, the customer must implement sufficient and comprehensive safety measures for working with the product.

Fritsch GmbH excludes any liability, warranty, or other obligation to compensate for damages, regardless of whether this liability, warranty, or other obligation is explicit or implicit, contractual or arising from unlawful acts or prescribed contractually, by law, or otherwise. In no event shall the buyer be entitled to any compensation from Fritsch GmbH for any special, direct, indirect, coincidental or consequential damage, including but not limited to lost profits, lost savings, lost sales or financial loss of any kind or for compensation of third parties, for downtimes, for lost goodwill, for damage to or replacement of equipment and property, for costs or restoration of materials or goods related to the product or the use of our products, for other damage or injury to persons (including fatal

injuries) or similar. The above exclusion of liability is limited by mandatory liability as prescribed by laws or jurisprudence. Liability for negligence is excluded in all cases.

No permission is given expressly, implicitly or otherwise for the use of patents, brands or other copyrights. We also assume no liability for copyright infringements or infringements of the rights of third parties arising from the use of this product.

Neither compliance with this operating manual nor the conditions and methods used during installation, operation, use and maintenance of the product can be monitored by Fritsch GmbH. Improper execution of the installation can result in property damage and thus endanger persons. Therefore, we assume absolutely no responsibility or liability for loss, damage or costs that result from errors at installation, improper operation or improper use or improper maintenance or are in any way connected to these.

13 Safety logbook

Date	Maintenance / Repair	Name	Signature

14 Index

FRITSCH

Fritsch GmbH
Milling and Sizing
Industriestraße 8
D - 55743 Idar-Oberstein
Telephone: +49 6784 70-0
Email: info@fritsch.de
Internet: www.fritsch.de