eurotab Bonals®

Powder compaction since 1910

BE30
eccentric press

The easy-to-use press for small & medium productions

Main features

- **Single or multi-tip punch***
- **Easy format changeover**
- **Robust & mechanical machine**

Key advantages

- Diversity of the tablet shapes & dimensions:
  Up to ø76 mm
- High strength of compression:
  Up to 300 kN
- Compatibility with numerous applications:
  Chlorine, pharmaceutical, R&D, minerals, food, chemicals, detergence …
- Production flexibility:
  - 3 adjustable speeds – 19, 24 & 34 strokes per minute
  - Easy height & hardness set-up

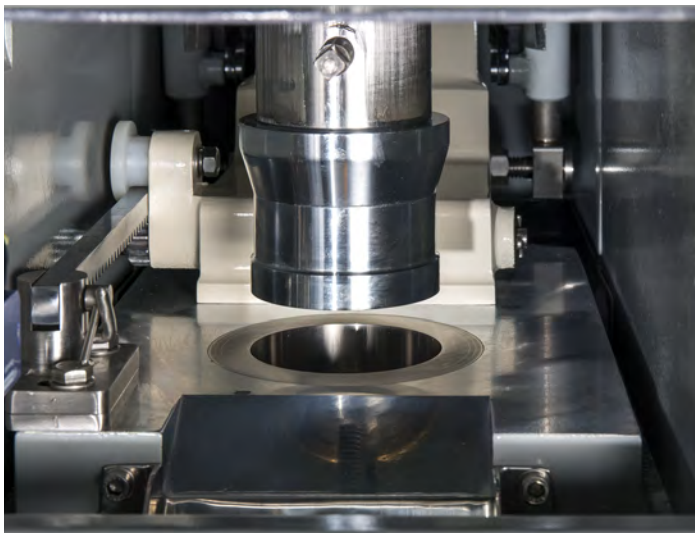

BE30

Technical data

MAIN PRESS DATA			
Power	**Max compression load**	**Type**	**Dimensions**
3 kW	300 kN	Eccentric	1083 mm x 1049 mm x 2024 mm

PRESS PERFORMANCES			
Net weight	**Number of stations**	**Speed**	**Output**
1200 kg	1	19, 24 & 34 strokes per minute	Single or multi-tip punch, Up to ø76 mm, From 1140 tablets per hour*

*output depends on powder and operation conditions

Dimensions and weight

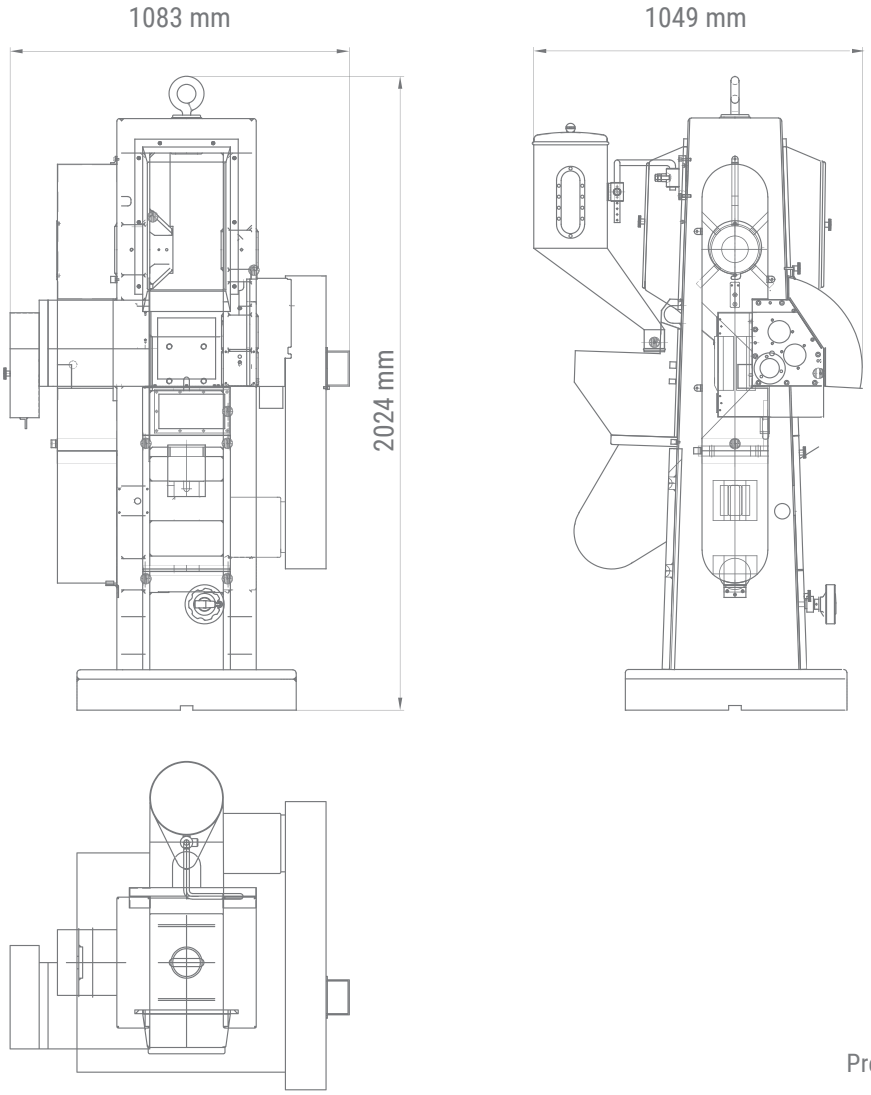

Press weight : 1200 kg

Eurotab Bonals France
258 route de St Marcellin · 42170 Saint-Just-Saint-Rambert · France
Phone: +33 (0) 4 77 52 72 80

Eurotab Bonals Spain
C/ Oliverar, 6 · 08940 Cornellà de Llobregat (Barcelona) · Spain
Phone: +34 93 471 45 80